ILLUMINATOR DATA

LTPVZE160X160D50-X-R-24V

Lighting Dimension

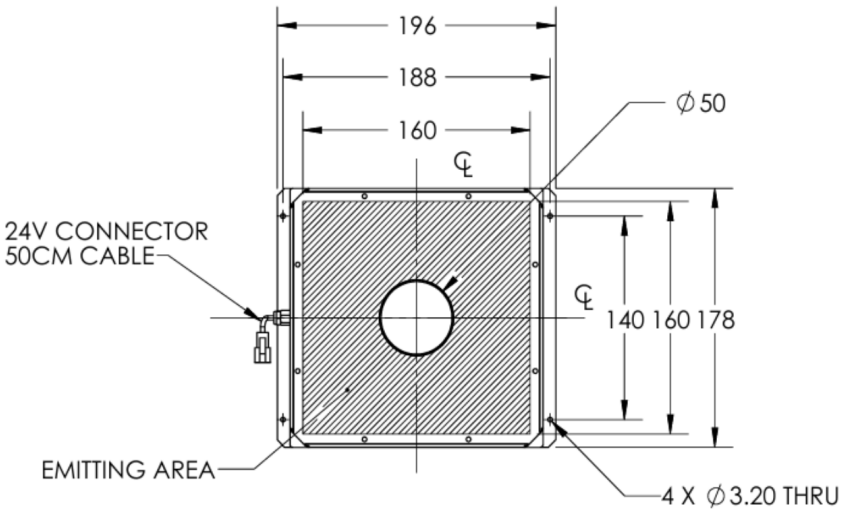

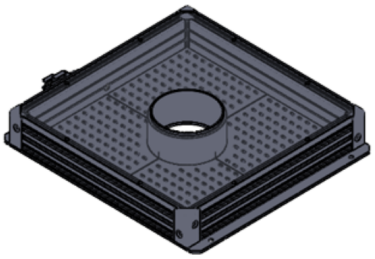

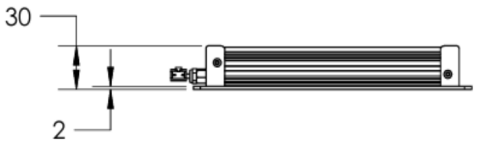

Mechanical Information

Casing Material	Aluminium
Storage Temperature Range	0 - 45°C
Storage Humidity Range	20 - 85%
Weight	665g
Width / Inner Diameter	178mm
Length / Outer Diameter	196mm
Height / Thickness	30mm

OPTO ENGINEERING

ILLUMINATOR DATA

LTPVZE160X160D50-X-R-24V

Lighting Information			
LED Color	RED		
Wavelength	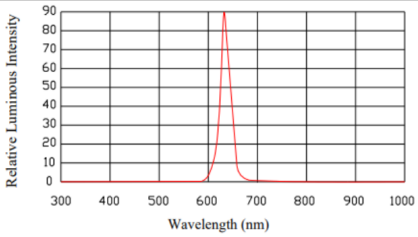 620 nm - 630 nm		
Working Distance	70mm	85mm	100mm
Intensity (±15%)	14994lx	13195lx	11977lx
Illumination (Number of Row)	0		
Illumination Active Area	Active Outer Diameter	160	
	Active Inner Diameter	160	
Emission Angle	0°		
Eye Safety Class (IEC62471)	EXEMPT Products with sources, which do not pose any potential photobiological hazard even for the continuous and unrestricted exposure. Example: 8 hours of exposure poses no acute hazard to either eye or skin, and 10,000 seconds (2.8 hours) of the intent starting causes no blue light retinal hazard.		
Chromaticity Table For White Colour Only			

Electrical Information	
Rated Voltage	$24V_{(Min)}$ - $24V_{(Max)}$
Rated Current	480mA
Power Consumption	11.520W
Casing Temperature, After 60 minutes operation	60°C

Strobe Mode Specification		
*Normal Strobe Voltage	24V	
*Normal Strobe Current	480mA	
Overdrive Voltage Range	Min: 36V	Max: 48V
Overdrive Current Range	Min: 1297mA	Max: 2114mA
Recommended Overdrive Voltage	36V	
**Max. Trigger Pulse Duration	10%	
**Max. Duty Cycle	10msec	

*Normal strobe means the lighting is operated using the rated power. Overdrive means the power supplied to the lighting exceeded the rated power.

**Overdrive condition must not exceed the max. trigger pulse duration and max. duty cycle.

ILLUMINATOR DATA

LTPVZE160X160D50-X-R-24V

Connection Information			
Connector Type	JST SMR-03V-B		
Cable Length	500mm		
Pin Configuration	**Pin**	**Signal**	**Cable Color**
	1	24V	RED
	2	-	-
	3	GND	WHITE / BLACK
	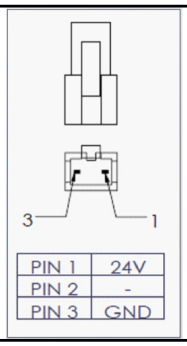		

Additional Information	
Additional Cooling Method	Attached to machine part for better heat dissipation
Intensity Controller Selection	LTIC series
CE Conformity	YES
RoHS Compliance	YES

Application	
Illumination Type	High Intensity Diffused Front Light
Application Use	• Robotic Picking • Identification of Missing Part • Dimensions Measurements • Dimensions Measurements 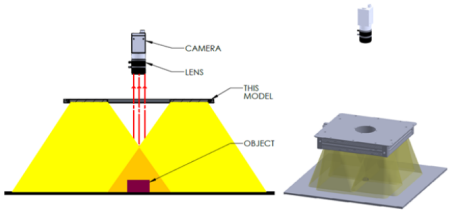

ILLUMINATOR DATA

LTPVZE160X160D50-X-R-24V

Lighting Pattern				
Working Distance	For further details, please contact us			
Display and Image	For further details, please contact us			
Data Results	Horizontal	Meas. (mm)	Vertical	Meas. (mm)
	90%	N.A.	90%	N.A.
	90%	N.A.	90%	N.A.
	80%	N.A.	80%	N.A.
	70%	N.A.	70%	N.A.
	60%	N.A.	60%	N.A.
	50%	N.A.	50%	N.A.
	40%	N.A.	40%	N.A.
	30%	N.A.	30%	N.A.
	20%	N.A.	20%	N.A.
	10%	N.A.	10%	N.A.